ASSEMBLY AND INSTALLATION INSTRUCTIONS

BASE SHELF UNITS • JUMBO SHELF UNITS • FLAT SHELF UNITS

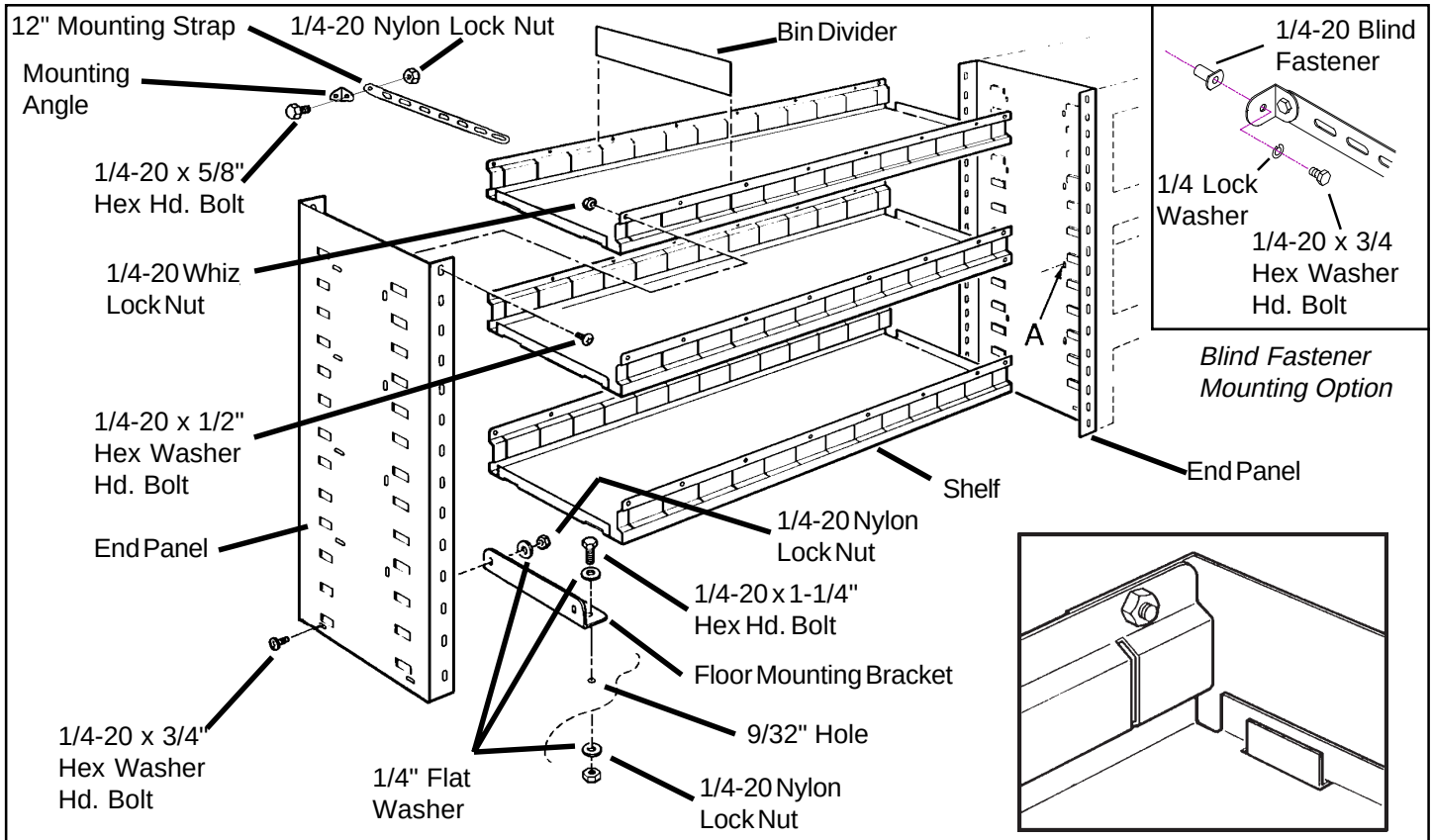

Figure 1. Typical Shelf Unit Assembly

IMPORTANT BEFORE YOU BEGIN

Read these instructions and warnings completely before assembly.

⚠ DANGER

Danger of explosion. Do not use this product for storing or transporting flammables, explosives, hazardous materials, or hazardous waste, such as containers of gasoline, solvents, gun powder, dynamite, propane tanks, acetylene tanks and cutting torches. This product is only intended and safe for use in storing and transporting small tools, equipment and other similar materials. Any modifications made to, or unintended use of this product, could create a hazardous condition that can cause death, serious personal injury or property damage.

PARTS LIST

8320, 8332, 8335, 8343, 8353,	8323, 8333, 8342, 8352 8365	8423 8433 8443 8453 8474 8475	8324 8334 8344 8354	8444 8454	8362 8372 8373 8363	8463 8473 8476	Description
	2	2	2	2	2	2	Floor Mounting Brackets
	0	0	6	12	0	0	Flat Shelf Dividers
	0	0	0	0	2	2	Center Support Leg
	6	12	0	0	6	12	Bin Dividers
	2	2	2	2	2	2	End Panels
	2	3	3	4	2	3	Shelves

Approximate Assembly and Installation Time
1 hr. to 1 hr 12 min. per unit (1.0 to 1.2 hrs.)
Depending on number of shelves and Van equipment installation experience

Rev. I 1/01 Part No. 24-8453

weather guard®
DIVISION OF KNAACK MFG. CO.

BOLT KITS

Your Shelf Unit has been shipped with it's individual bolt kit. Check this bolt kit to be sure the following parts are included:

8362, 8363 8365, 8372 8373, 8463 8473, 8476	8320, 8323 8332, 8333 8335, 8343 8342 8353 8352	8423 8433 8443 8453 8474 8475	8324 8334 8344 8354	8444 8454	DESCRIPTION
#32-0218	#32-0202	#32-0207	#32-0217	#32-0209	
2	2	2	2	2	12" Mounting Strap
6	6	6	6	6	1/4-20 x 5/8" Hex Head Bolt
6	4	4	4	4	1/4-20 x 1-1/4" Hex Head Bolt
22	14	14	26	38	1/4-20 Nylon Lock Nut
12	6	6	6	6	1/4-20 x 3/4" Hex Washer Head Bolt
1	1	1	1	1	1/4-20 x 2-1/4" Hex Head Bolt, Blk. Ox.
3	3	3	3	3	1/4" Lock Washer
3	3	3	3	3	1/4-20 Blind Fastener
1	1	1	1	1	Installation Tool
22	18	18	18	18	1/4" Flat Washer
12	8	12	24	40	1/4-20 x 1/2" Hex Washer Hd. Bolt
12	8	12	12	16	1/4-20 Whiz Lock Nut (No Flange)
2	2	2	2	2	Mounting Angle

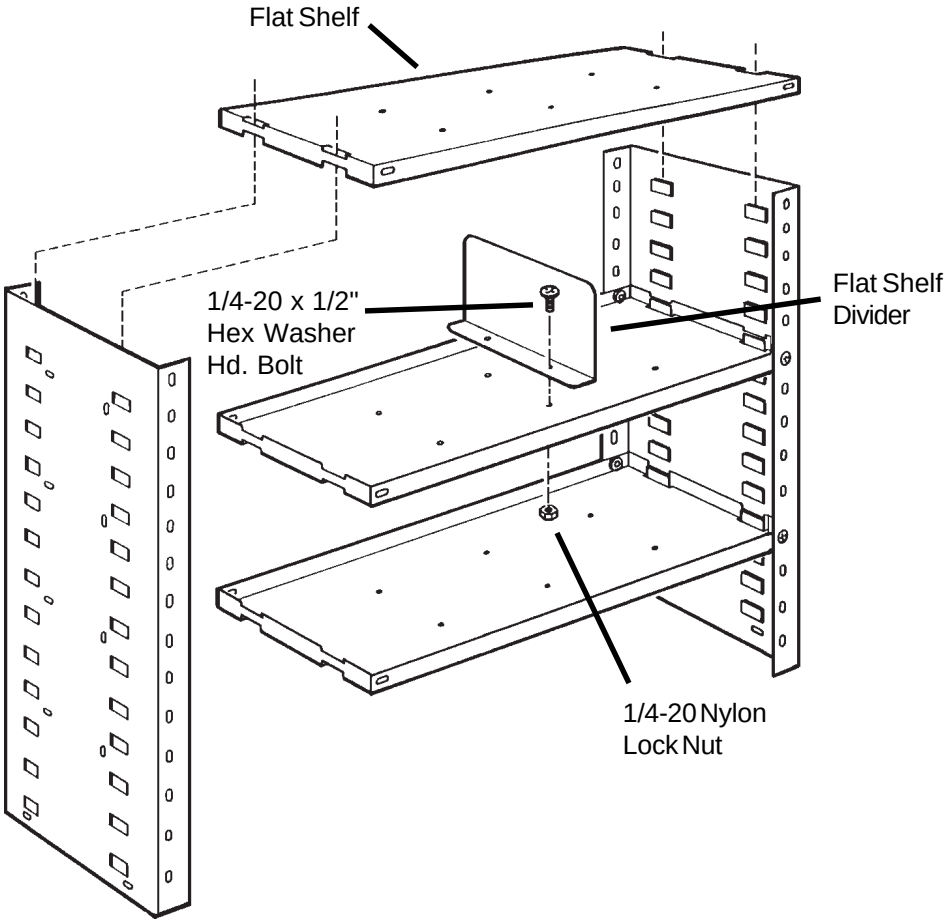

Figure 2. Flat Shelf Assembly

TOOLS REQUIRED

- 7/16" Open or Box End Wrench (2)
- Drill with 9/32" and 13/32" Drill Bits
- 9/16" Open or Box End Wrench

ASSEMBLY INSTRUCTIONS

1. Select the shelf spacing you desire and assemble the Shelves to the End Panels by pushing the shelf down, with the End Panel tab entering the pierced opening on the shelf edge (*See inset drawing on front page*). Fasten the Shelves to the End Panels.

2. Loosely attach the Floor Mounting Brackets to the bottom of each End Panel as shown in *Figure 1*.

NOTE - If you are installing Center Support Legs, read Step 11 before proceeding with Step 3.

⚠ CAUTION

To keep debris out of your eyes when checking the underside of the vehicle, or when drilling, always wear protective eyewear.

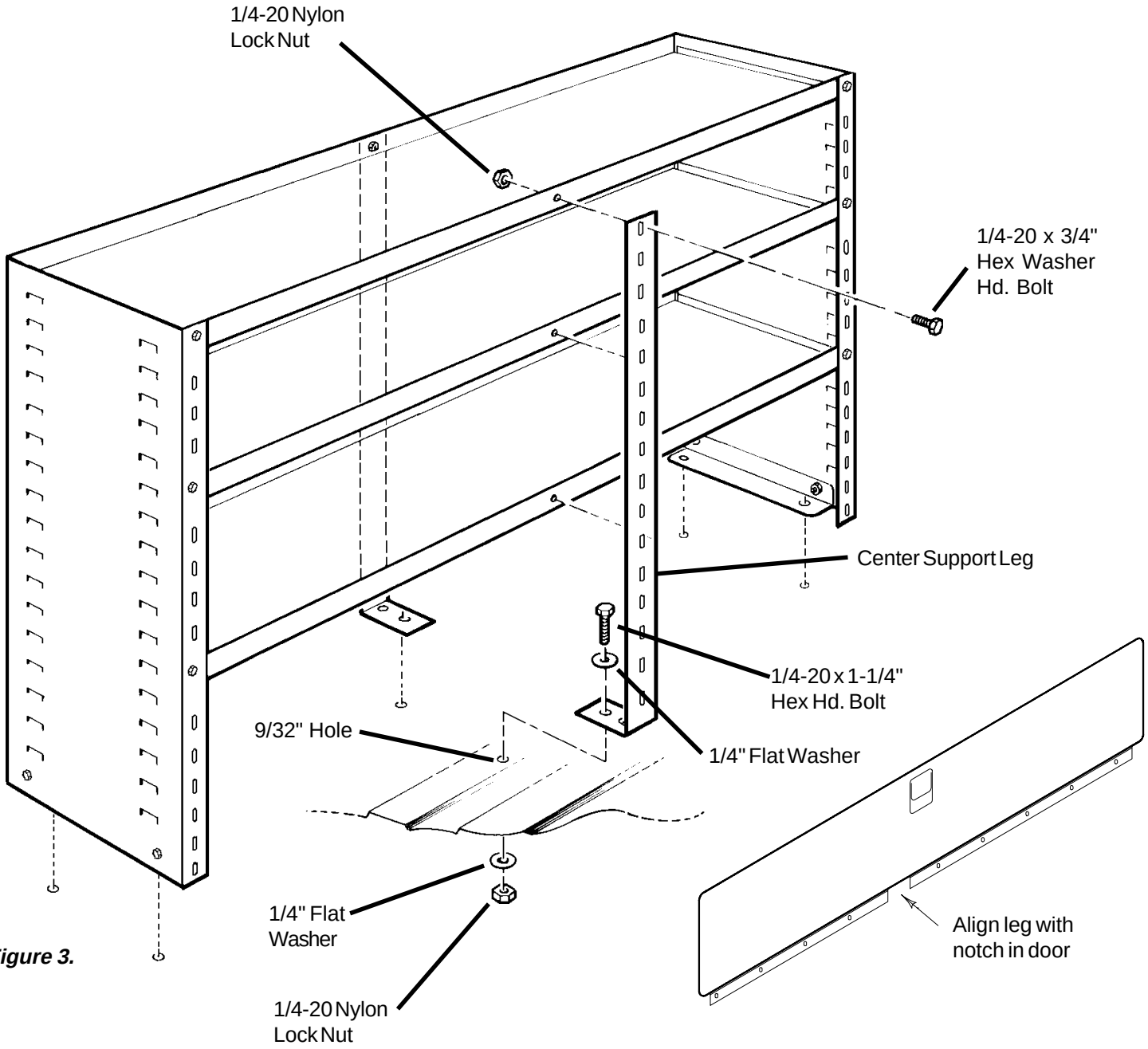

Figure 3.

3. Place the assembled shelf unit into your vehicle as close to the side wall as possible in the location you desire. Mark the floor through the Floor Mounting Bracket bolt holes. Remove the shelf unit for drilling **(9/32" Holes)**.

⚠ CAUTION

Prior to drilling, so as not to cut or puncture fuel tanks, fuel lines, brake lines, electric wires, etc., check under vehicle for locations.

⚠ WARNING

All floor mounting bolts near the gas tank area should be installed from the underside of the vehicle, to guard against the gas tank being punctured in the event of a collision. This would mean not using Blind Fasteners in this area. Holes in this area should be 9/32".

4. Drill the hole locations**,** replace the unit and fasten.

NOTE: Three Blind Fasteners and three 1/4" Lock Washers have been provided for use in areas where standard fasteners can't be used, such as heat shields, wall channels, and double wall panels. **(13/32" holes are needed for Blind Fasteners)**

5. Two Mounting Straps and two Mounting Angles are provided. The Mounting Straps can be bent to any shape and/ or used with the Mounting Angle.

6. The Mounting Strap should be attached to the upper portion of the unit in a manner that would minimize movement of the unit both front to rear and side to side. (A 1/4-20 x 5/8" Bolt, a 1/4" Flat Washer, and a 1/4-20 Nylon Lock Nut will be used for each strap to van shelf connection)

7. The other end of the Mounting Strap will be attached to the van wall or wall support channel. This will be done with a nut and bolt or a Blind Fastener if needed.

8. Insert the Bin Dividers into the shelf slots.

9. If installing more than one shelf unit, or already have one installed, holes in the end panels (A) are provided for through bolting into the next unit for greater rigidity.

10. FLAT SHELF INSTALLATION: Assembly is the same as other units, however, shelves may be placed with the lip up or down. Fasten Flat Shelf Dividers where desired. (*See Figure 2.*)

11. 60" & 69" SHELF UNITS: Center Support Legs have been added to these units to strengthen these shelves because of their length. Fasten the Support Leg in the center of the shelves (See *Figure 3)*.

NOTE: If installing doors on these units, the support leg will need to be installed off-center on the shelf (*see Figure 3*). Positioning of the support leg can easily be found by holding the door in position on the shelf. The notched out area of the hinge is where to locate the support leg. (Proceed to Step 3.)

INSTALLATION PROCEDURE USING BLIND FASTENERS

⚠ CAUTION

Prior to drilling, so as not to cut or puncture fuel tanks, fuel lines, brake lines, electric wires, etc., check under vehicle for locations.

Place a drop of oil on the black oxide bolt before assembling as shown on right. Place the Blind Fastener in the hole and use a 1/2" or 7/16" wrench to tighten black hex bolt until the blind fastener is fully seated. When setting black hex bolt, it will start out hard. As the Blind Fastener "bulbs" out it will get easier, until it bottoms out or sets. Make sure the Blind Fastener and Installation Tool do not turn during installation.

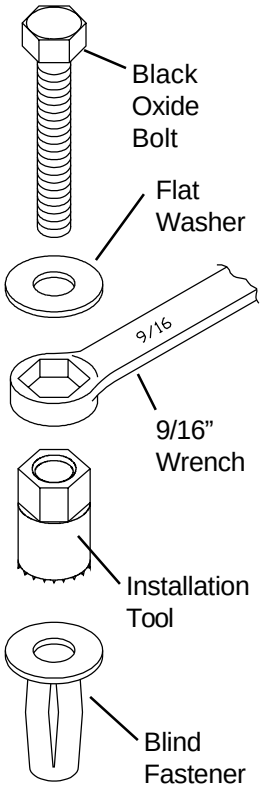

- NOTICE -

Any modification or unintended use of this product shall immediately void all manufacturers warranties. Manufacturer disclaims all liability for injuries to persons or property resulting from any modification to, or unintended use of this product.

If you have any questions, please give us a call. **Call Toll Free 1-800-456-7865**

WEATHER GUARD® products are protected by one or more of the following trademarks:
U.S. - 842268, 1661625, 1663369, 2228051, 2362167; Canada - 282725; U.K. - 1400720; N.Z. - B296049; Aus. - 761964

KNAACK MANUFACTURING COMPANY

KNAACK MANUFACTURING COMPANY
420 E. TERRA COTTA AVENUE - CRYSTAL LAKE, ILLINOIS, USA 60014
815-459-6020

©2001 Knaack Manufacturing Company